LEGEND
PLUMBING • INDUSTRIAL • COMMERCIAL • HYDRONICS

SUBMITTAL SHEET

JOB NAME | ITEM TAG

JOB LOCATION | PART NUMBER

CONTRACTOR | DATE

ENGINEER APPROVAL | DATE

PVC STOP & WASTE VALVE

Model S-622

Working Pressure, Non Shock (PSI)

Cold working pressure (CWP): 150 @ 72 F

Saturated steam (WSP): Not recommended for steam service

Maximum service temperature: 140 F

Pictured
S-622

MATERIAL SPECIFICATION

	PART	MATERIAL	SPECIFICATION
1	Screw	Zinc plated steel	?
2	Hand wheel	Polypropylene	?
3	Stem	PVC	ASTM D1784
4	O-ring	EPDM	Rubber commercial grade
5	Hard washer	Celcon	?
6	Washer	EPDM	Rubber commercial grade
7	Bonnet	PVC	ASTM D1784
8	Body	PVC	ASTM D1784
9	Seat seal	POLYAMIDE NYLON 12	?
10	Waste screw	Zinc plated steel	?
11	Waste screw washer	EPDM	Rubber commercial grade

DIMENSIONS

Size	A	B	C	D
1/2"	2.50	3.63	3.47	2.05
3/4"	2.68	3.78	3.53	2.05

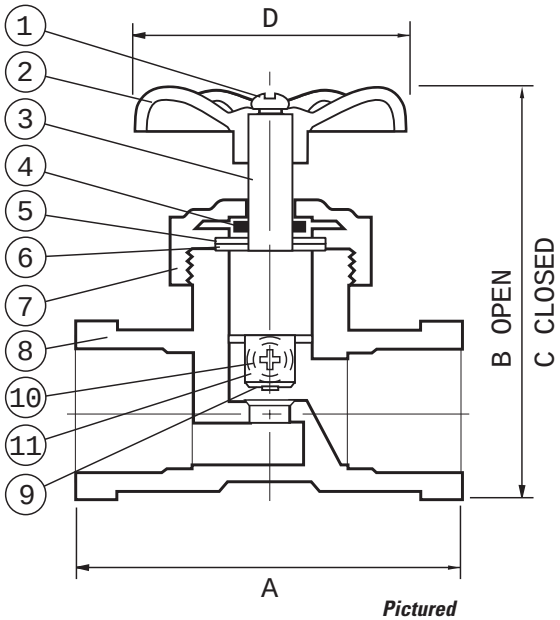

Pictured
S-622
Cut-away