Specifications

(The wire rope composition is a manufacturer recommendation.)

Load Rating Wire Rope Tension	2,200 lbs(=1,000kgf)	Handle Force	Handle Length 11 13/16" / Wire Rope Tension 2,200lbs	23.8lbs(=10.8kgf)
Wire Rope Diameter	φ5/16"(6×36)	Standard Accesories		One Handle
Gear Ratio	1/12.6			
Effective Handle Length	11 13/16"(Maximum)	Painting		Melamine Resin Coating At Two Layers Painting Color Drum : Black(Munsell N1 Semi Gloss) Others : Munsell 7.5YR6/11
Weight	44.3 lbs(Winch+Handle)			

※Model MC winch is designed only for horizontal pulling.
Never use this winch for vertical lifting.
It may result in serious accident and breakage of the winch.

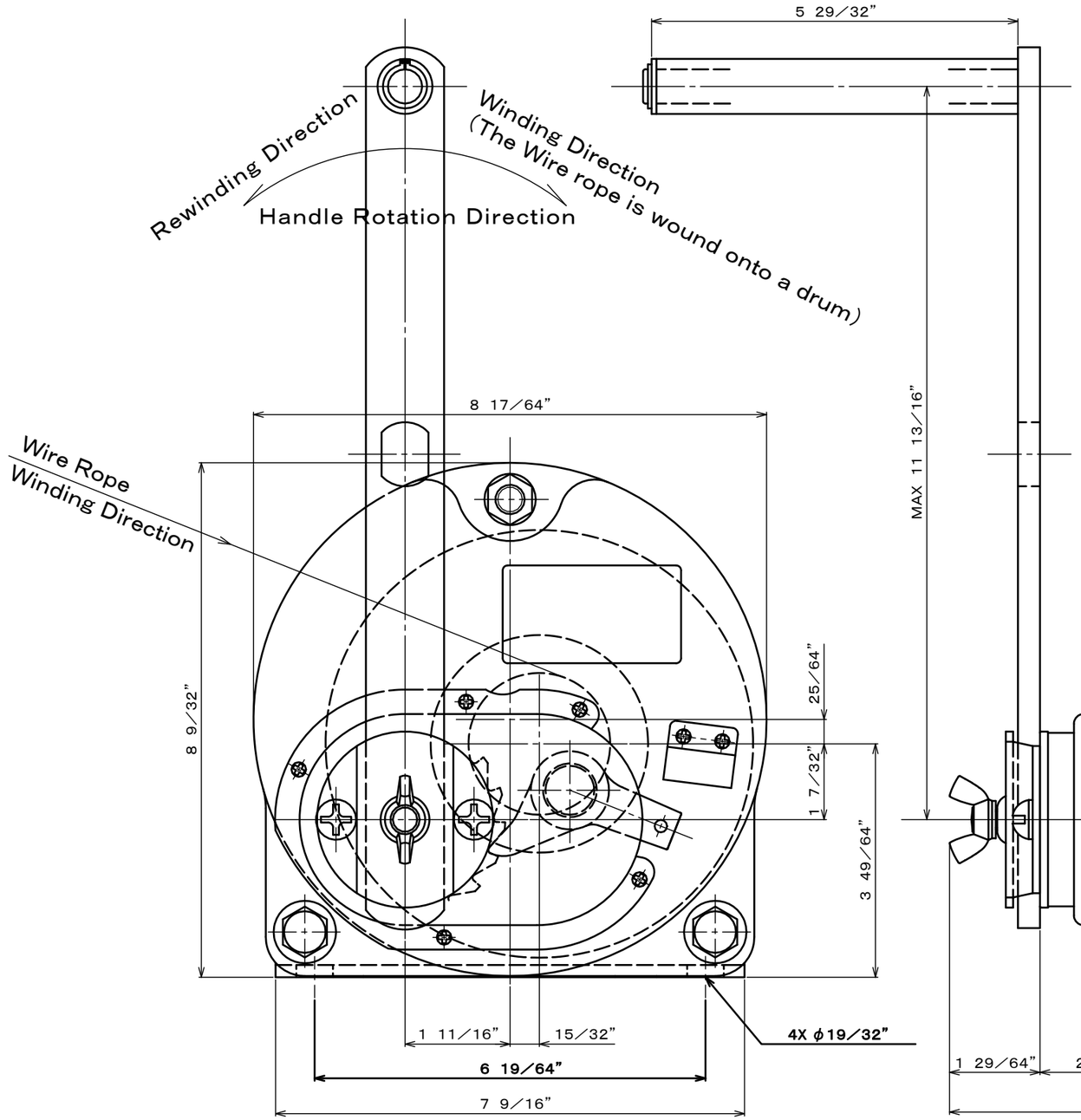

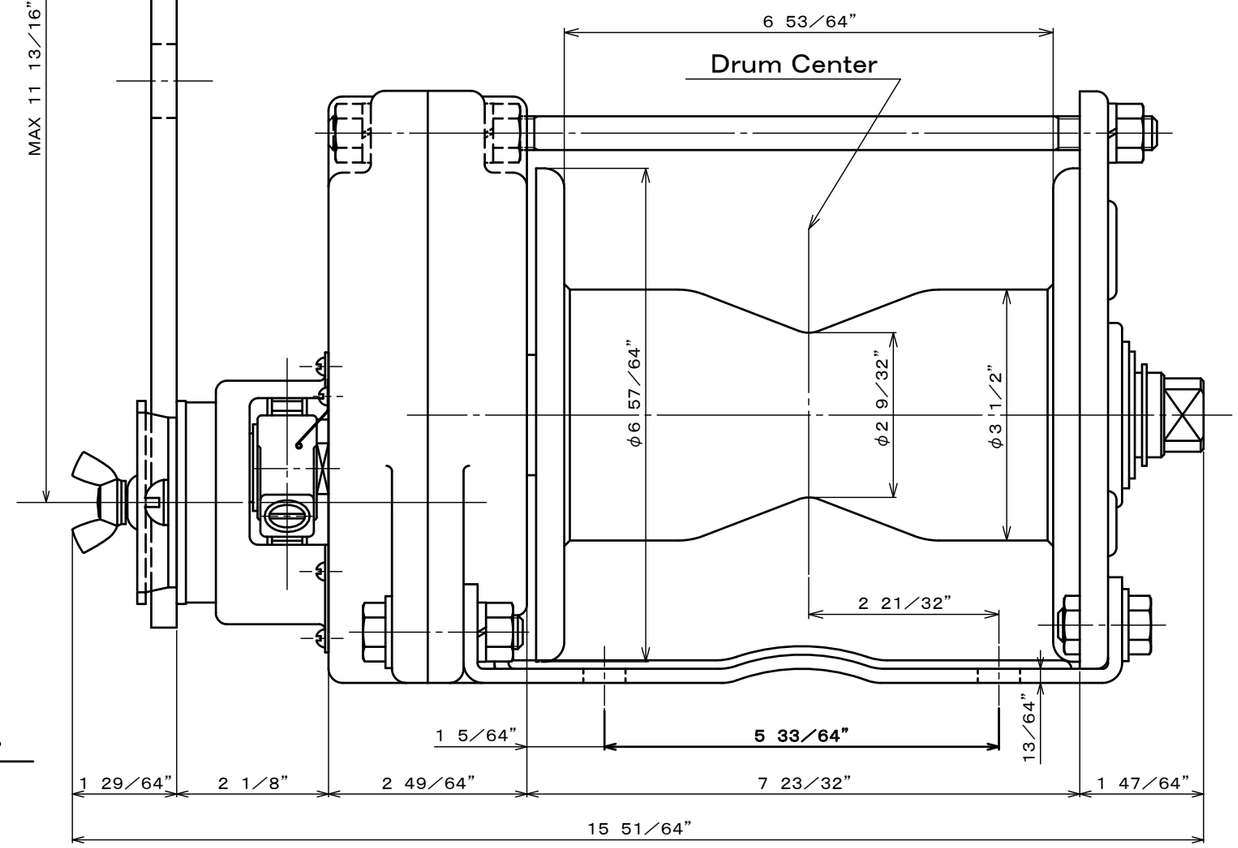

4 ×				図面番号／DRAWING No. MC10-180402-01U	改訂番号 REVISION No. 00	お客様／CUSTOMER	符号 MARK	項目 PARTICULARS	材料 MATERIAL	数量 QTY / 単体 PER ONE / 合計 TOTAL / 重量(kg) WEIGHT / 備考 REMARKS
3 ×				承認／APPROVED 設計部 '18.04.05 米澤	検図／CHECKED 設計部 '18.04.05 松嶺	作成／DRAWN 設計部 '18.04.05 武松	図面名／TITLE MAXPULL WINCH CAPSTAN TYPE MODEL MC-10			
2 ×							投影法／PROJECTION METHOD 第三角法 THIRD ANGLE PROJECTION			
1 ×							尺度／SCALE :	台数／QTY		
改訂／REVISION										

MAXPULL MACHINERY & ENGINEERING CO.,LTD.
マックスプル工業株式会社