※To prevent irregular winding of the wire rope around the drum,
keep the fleet angle 2 degrees or less.
Please install the pulley 6ft or more away from the drum
on the center line of the drum.
※The value of specified "Wire Rope Tension" on this drawing is for
the standard layer or less.
The value of the "Wire Rope Tension" must be decreased accordance
with the ratio of the actual winding layers, if it exceeded.

Specifications

(The wire rope composition is a manufacturer recommendation.)

Load Rating Wire Rope Tension	220 lbs(=100 kgf) 4th Layer(Standard Layer)	Handle Force	Handle Length 9 27/32"	Number of Wire Rope Winding Layer 1st Layer 32.2lbs(=14.6kgf) 3rd Layer 41.9lbs(=19.0kgf) 4th Layer 46.7lbs(=21.2kgf)
Drum Capacity	Wire Rope 6-Layer Windings φ3/16"(7×19)×114 ft		Wire Rope Tension 220 lbs	
Gear Ratio	1/1	Standard Accesories		One Handle One Hex Wrench for Anchoring the Wire Rope
Effective Handle Length	9 27/32"(Maximum)	Painting		
Weight	16.3 lbs(Winch+Handle)			

[Material of the main part of the winch (JIS)]

Side frame A, Side frame B, Drum, Bed plate, Clutch cover, Handle arm	SUS304
Drum shuft	SUS304
Bolts/Nuts, Retaining rings, Springs, etc.	SUS304
Ball bearings	SUS440C
Clutch	CAC403
Mechanical brake parts except clutch	SUS303 SUS304 SUS420J2

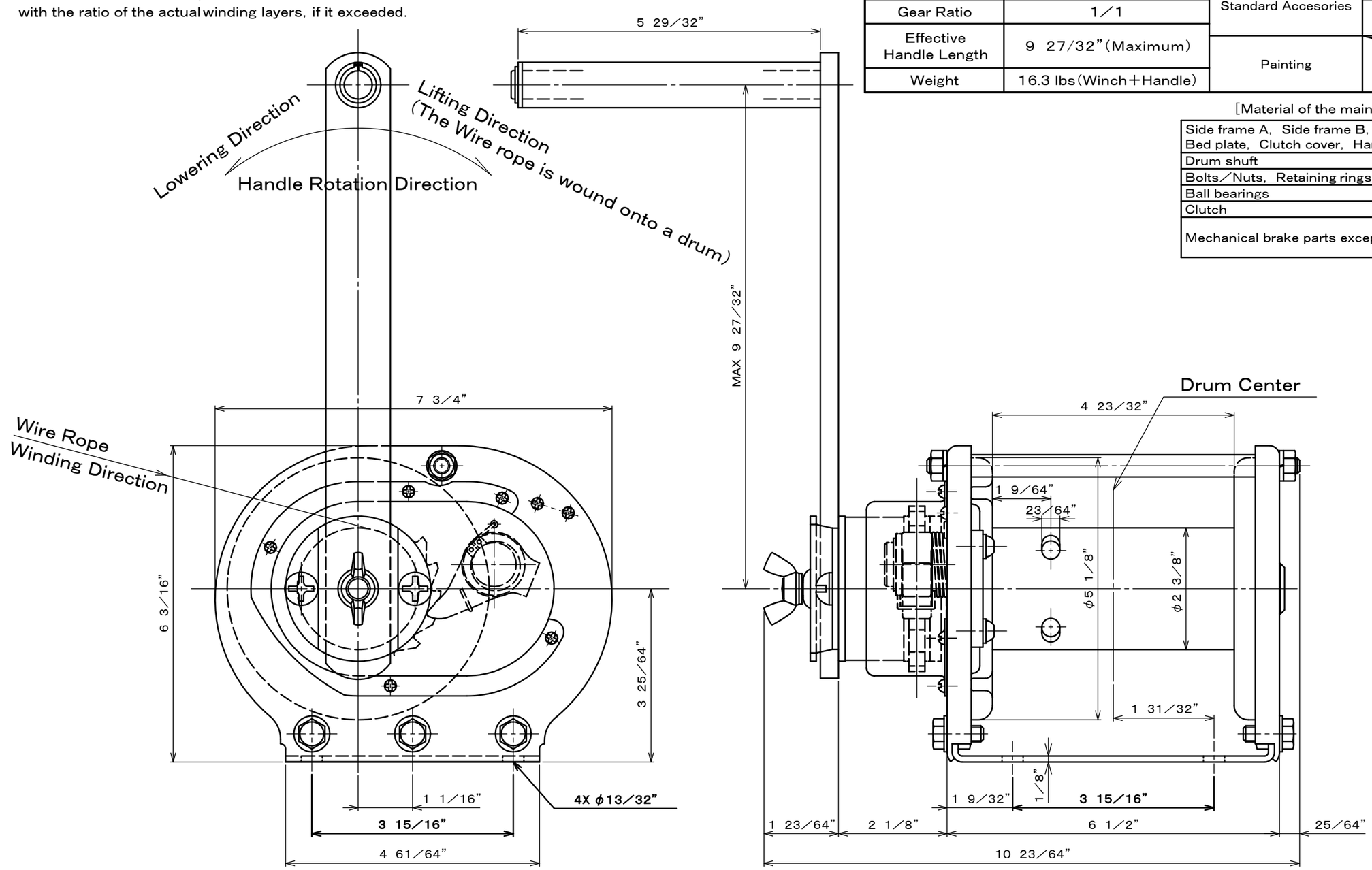

4 ×				図面番号/DRAWING No. ESB1SI-180402-01U	改訂番号 REVISION No. 00	お客様/CUSTOMER	符号 MARK	項目 PARTICULARS	材料 MATERIAL	数量 QTY / 単体 PER ONE / 合計 TOTAL / 重量(kg) WEIGHT / 備考 REMARKS
3 ×										
2 ×				承認/APPROVED: 設計部 '18.04.06 米澤	検図/CHECKED: 設計部 '18.04.06 松嶺	作成/DRAWN: 設計部 '18.04.06 武松	図面名/TITLE: MAXPULL STAINLESS STEEL WINCH (ELECTROPOLISHING) STOPPER ARMLESS ROTATING MODEL ESB-1-SI			
1 ×							投影法/PROJECTION METHOD: 第三角法 THIRD ANGLE PROJECTION			
改訂/REVISION							尺度/SCALE: :	台数/QTY		

MAXPULL MACHINERY & ENGINEERING CO.,LTD.
マックスプル工業株式会社