WEIGH SAFE, LLC
LTB 6X3 HITCH

NOTE: FOR ALL HITCH MANUFACTURERES, THE 'DROP' IS MEASURED FROM THE TOP OF THE RECIEVER BAR TO THE TOP OF THE BALL HOUSING,

LOWER POSITION

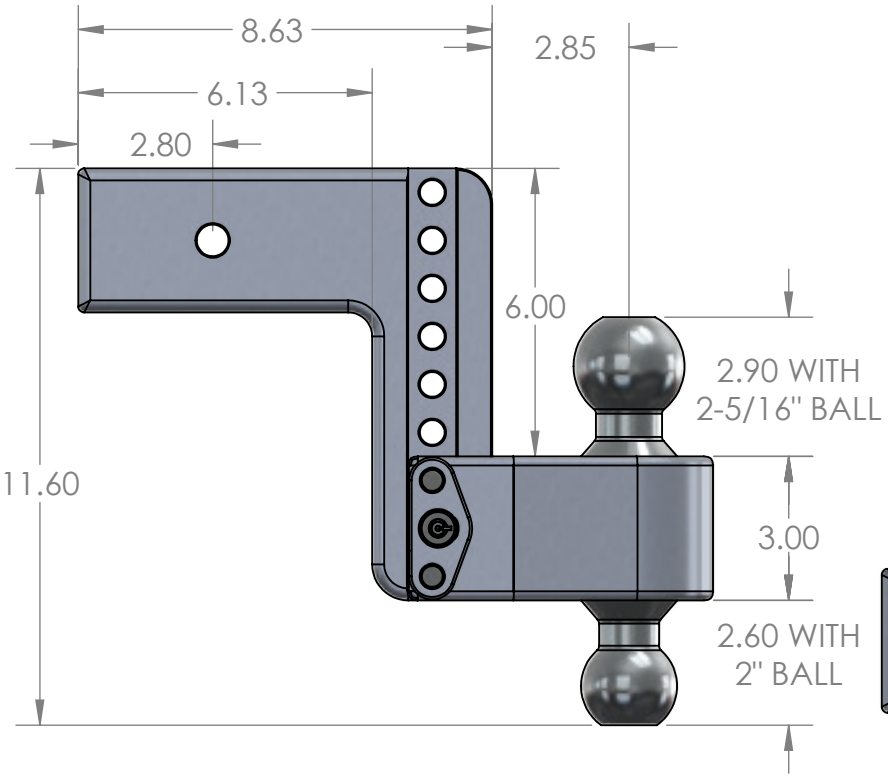

RISE POSITION

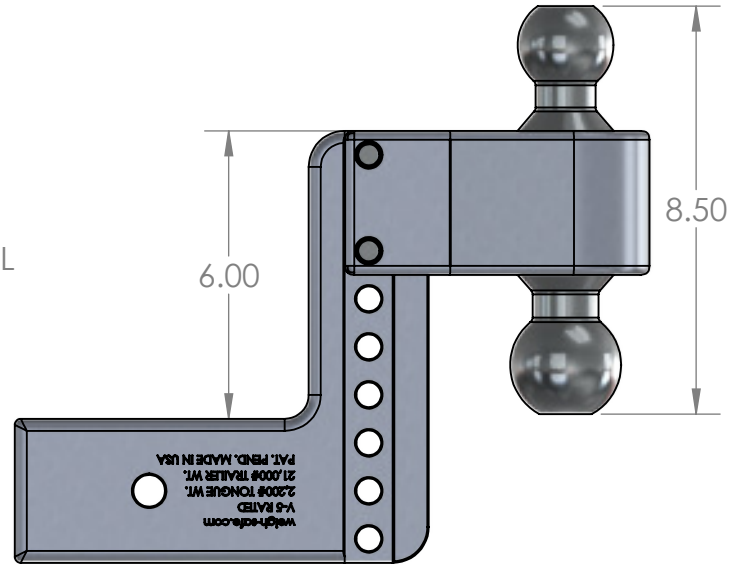

UPPER POSITION

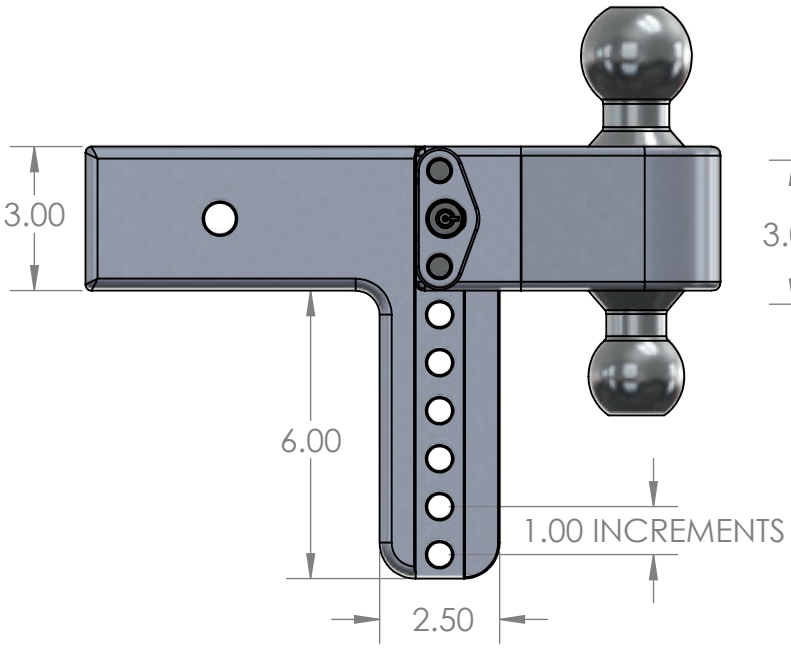
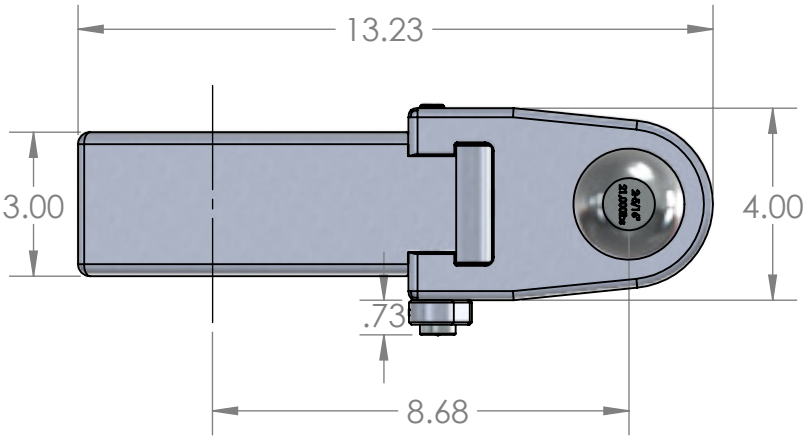
TOP VIEW