Kihei ShowerSpa

Model # 1013-GL

Specification Sheet

297 Anna St. | Watsonville, CA 95076
831.724.7300
www.PulseShowerSpas.com

TECHNICAL INFORMATION
- Finishes: Silver Glass
- Fixtures: Chrome
- GPM: 2.5
- Connection: 1/2” Hot & Cold Supply Lines

PRODUCT FEATURES
- Surface mounted & pre-plumbed
- 8 inch rain showerhead
- 6 PULSE PowerSpray™ body jets
- Brass shower arm adjusts height and angle of showerhead
- Slide bar adjusts height and angle of handshower
- Sleeek silver colored 8mm tempered glass panel with anodized aluminum frame and chrome fixtures
- Dual-function (on/off) on bottom four body jets

NOTES
- Measure your actual product for rough-in details
- Install this product according to the installation instructions

CODE/STANDARDS
- cUPC Approved
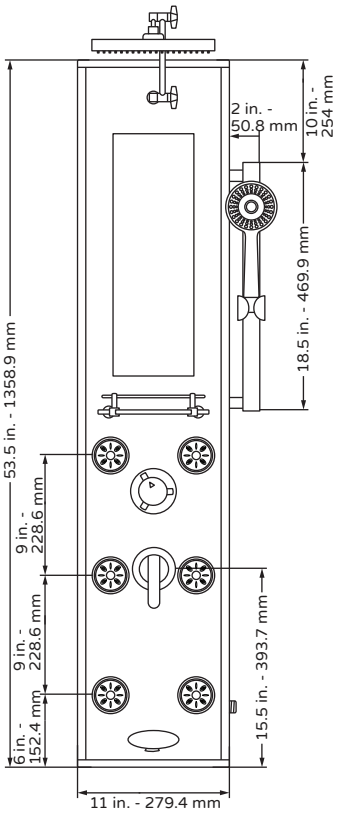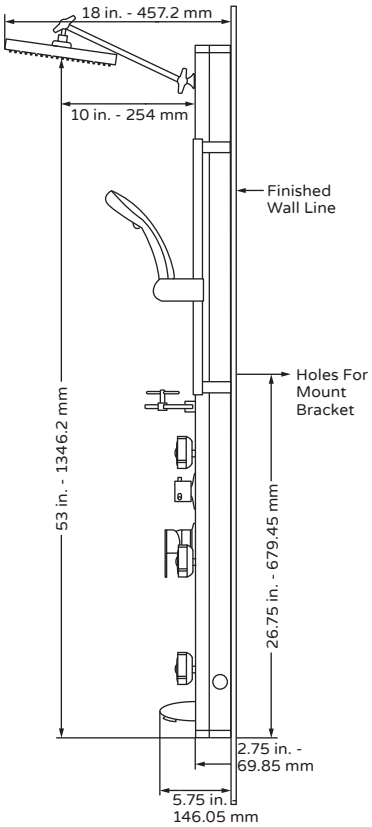
WARRANTY
- Lifetime Limited Warranty